Installation Guide

2017 TigerStop, LLC®

USA BUILT

TigerStop®

fast and accurate...every time

TigerFence

January 2017 Mk1

Serial Number:

TigerFence Installation Guide

☐ Controller

☐ Controller Cable

☐ Power Cable

☐ Quick Ref. Cards

☐ Nut Pack

☐ Controller Stand

☐ Rip Fence and Body

☐ Template
In cardboard tube

☐ Cover

☐ 50mm Bar

Table of Contents

Safety First!

IMPORTANT SAFETY INFORMATION. READ ALL WARNINGS BEFORE OPERATING THIS PRODUCT.

GENERAL WARNINGS

WARNING: Installation of your TigerStop Product must be done by a person trained in the safe design and installation of automation products, and in the safe operation of power equipment. Ensure that such installation meets all legally required safety requirements and guidelines, and that proper guarding and safety devices are provided on all sides of the equipment to preclude unintended access during operation. Consult with and follow the recommendations of a qualified safety engineer.

WARNING: TigerStop Products are components intended for use in conjunction with potentially dangerous machinery. The use of TigerStop Products does not make other machinery safe. TigerStop Products are not intended to substitute, in any manner, for safe operating practices in general, or for safety features present in other machines designed to make those machines as safe as possible. **TIGERSTOP PRODUCTS, IF USED OR INSTALLED IMPROPERLY, MAY CAUSE PERSONAL INJURY OR DEATH AND SHOULD ONLY BE OPERATED BY PERSONS TRAINED IN THEIR SAFE OPERATING PROCEDURES.** Illustrations of TigerStop Products in use do not show, and are not intended to show, all safety features and practices necessary for their safe operation.

INSTALLATION WARNINGS

WARNING: TigerStop Products must be installed in accordance with all local, state, and federal regulations. Only personnel properly trained in the safe design and installation of automation machinery and related power equipment should install TigerStop Products onto other equipment, to ensure a safe and proper work station. TigerStop Products should not be operated without proper training, both in the operation of TigerStop Products, and in the operation of related equipment.

IMPORTANT CAUTION:
The motor box (compartment) contains DC voltage with potentially FATAL amperage. NEVER attempt any unauthorized actions inside the motor box.

INTERCONNECTS

WARNING: Using a TigerStop interconnect does not relieve you of the responsibility for making sure that your saw or other tool has all the necessary safety equipment in place. All installations must meet all legally required safety requirements and guidelines. Installation and training should be done following the recommendations of a qualified safety engineer.

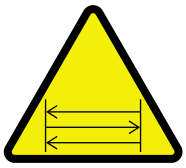

OPERATION

DANGER: This machine can start, move and stop automatically. Keep hands and loose clothing clear of moving parts while operating. Moving parts can crush and cut. When used with a saw or other cutting equipment, bodily injury and death may result if operated without safety guards on all machines. Do not operate with guards removed. Operators must wear adequate eye and ear protection.

DANGER! Don’t get pinched by the push feeder. Keep your hands away when in motion!

IMPORTANT SAFETY INFORMATION. READ ALL WARNINGS BEFORE OPERATING THIS PRODUCT.

Keep the work area clean and well lighted to avoid accidental injury.

Do not use TigerStop machines in a dangerous environment. Using power tools in damp or wet locations or in rain can cause shock or electrocution.

Do not operate near flammable liquids or in gaseous or explosive atmospheres!

Wear proper apparel, no loose clothes, long hair or jewelry which could get pulled into moving machinery or materials.
Wear non slip footwear, safety glasses, ear protection and a dust mask.

Use only 3- wire extension cords that have 3-prong grounding type plugs and 3-pole receptacles that accept the tools plug for 120VAC. Use only 5-wire cords and plugs when using 3 phase.

Do not open motor compartment or controller keypad. DC Voltage with potentially FATAL amperage! Disconnect power before servicing. No user-serviceable parts inside.

DO NOT operate this or any machine under the influence of drugs or alcohol!

No one should operate this machine except for fully qualified personnel.

Read the manual!

Installation Requirements

TigerFence Power

120 VAC	4 Amps
220 VAC Single Phase	15 Amps

TigerFence must have its own dedicated circuit. No other equipment or devices should be on the same circuit.

Note: Do NOT use TigerFence on a high leg delta circuit!

Grounding

TigerFence must be properly grounded. TigerStop recommends a qualified electrician perform the grounding of the system.

Warning! Operating TigerFence without proper grounding can result in electric shock or electrocution.

Installation Surface

TigerFence will mount directly to the cast saw table. This surface must be at least 2.25 inches high. It is critical that this surface is flat and smooth. Any deviation in the mounting surface may cause accuracy problems or may impact the life of the machine.

Register Your Warranty

When your new TigerStop arrives, you will find a warranty registration wrapped around the controller, in the accessory box.

Fill out this form and fax it to TigerStop Customer Service at (360) 260-0755 or email to service@tigerstop.com.


TigerStop Warranty Registration

Company Information

TigerStop Customer Service will contact you by phone to give you the enable code, within the hour during regular business hours, (360) 448-6102 Mon-Fri 6am~4pm PST
(West Coast), or the next business day if faxed after 4:00 P.M.

To use your TigerStop, you have to enable it! Your TigerStop warranty begins on the day that your TigerStop is enabled!

1. When TigerStop is first powered on, the screen displays "Enter Enable Code…Call TigerStop…ph# 360-254-0661" and the machine serial number in the format SN=#######.
2. When you receive the enable code from TigerStop, enter the number, and press [=] to load it.

What is my Password?

The TigerStop password is set to the serial number at the factory. It is also stamped on the main TigerStop beam, at the far end.

TigerFence Installation

Remove Existing Fence

Remove the existing fence from the front of the saw table. This surface must be very straight and true for TigerFence to function properly. If the mounting surface is not straight, the fence cannot stay parallel with the saw blade as it moves across the table.

Inspect the mounting surface carefully. Any bumps should be filed down and any valleys should be filled in. The mounting surface must be flat, straight and smooth. If this is not possible, you may need to shim TigerFence to make it perfectly parallel with the saw blade.

Lay the Template Over the Table.

Remove the paper template from the cardboard tube. Fold the paper TigerFence mounting template over the saw table as shown on the template. Using a center punch, mark each drilling hole.

Note: Check the underside of the table before drilling to ensure the marked drill hole will be suitable as a mounting point.

Drill the marked holes using a 3/8 inch drill bit.

Insert Mounting Hardware

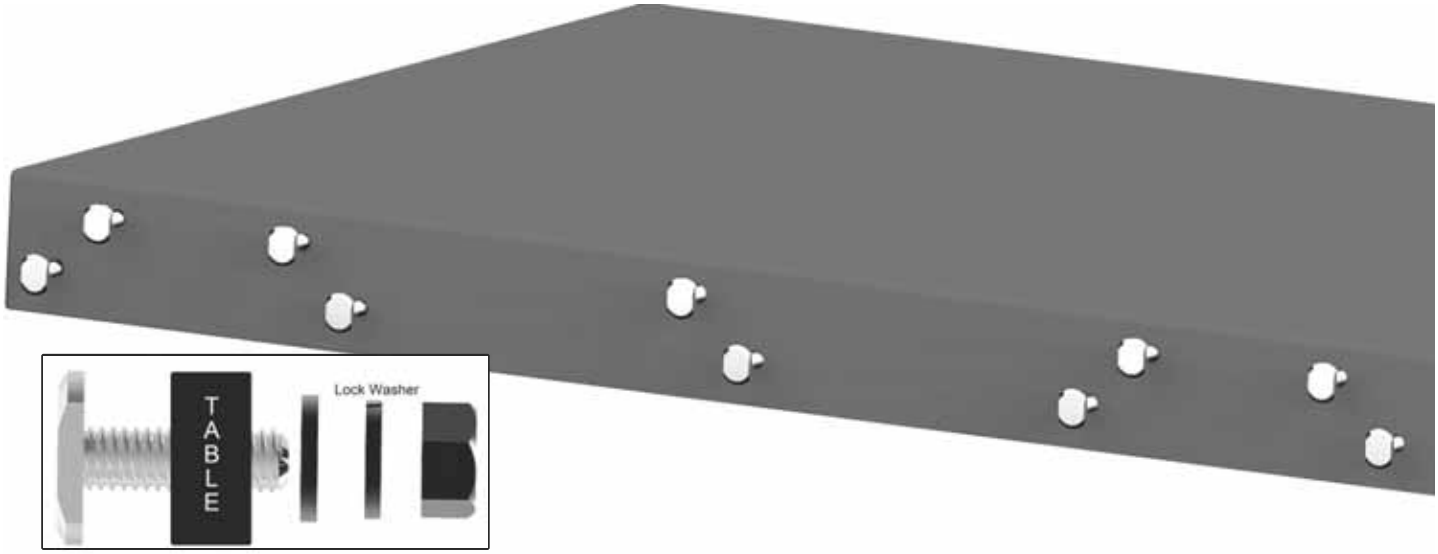

Slide TigerFence onto Hardware

.

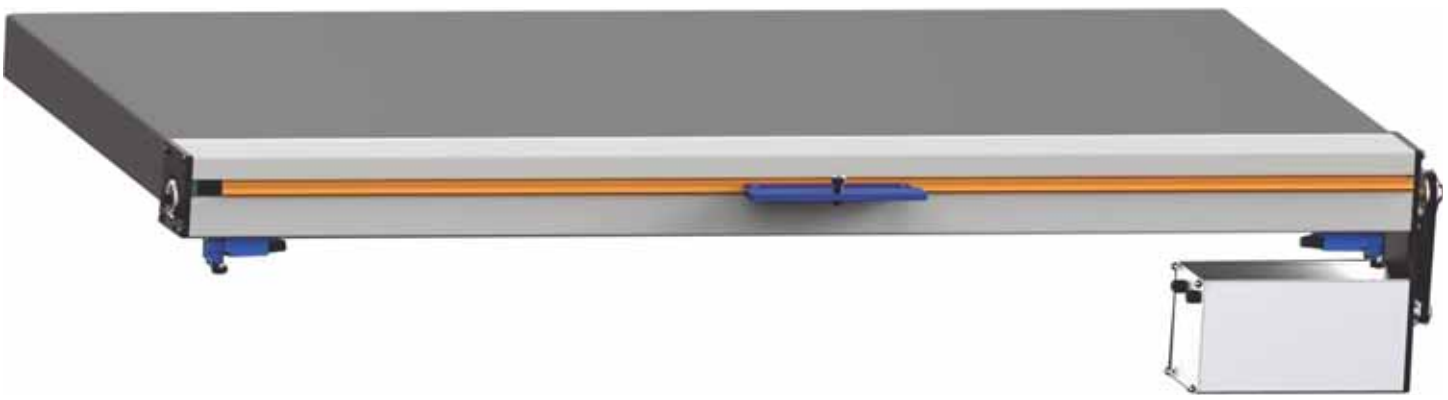

Tighten Mounting Hardware

Have a helper hold TigerFence in position. Tighten the bolts on each set of mounting hardware.
Note: Tighten them 1/4 turn past finger tight. Do NOT overtighten.

Check for Flush and Level

Once TigerFence is mounted, check to ensure the TigerFence beam is flush and level to the saw table.

Attach the Fence Body

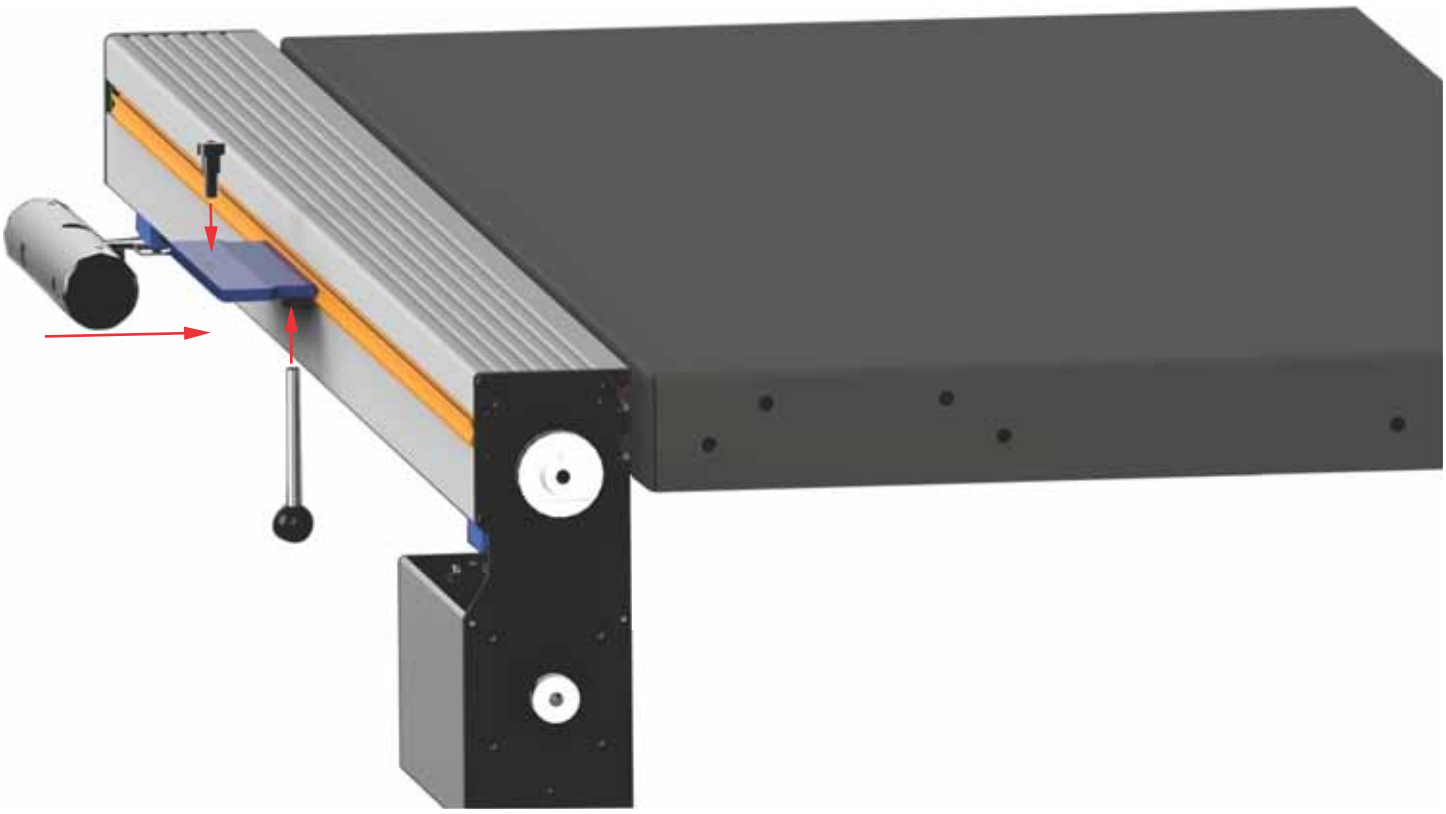

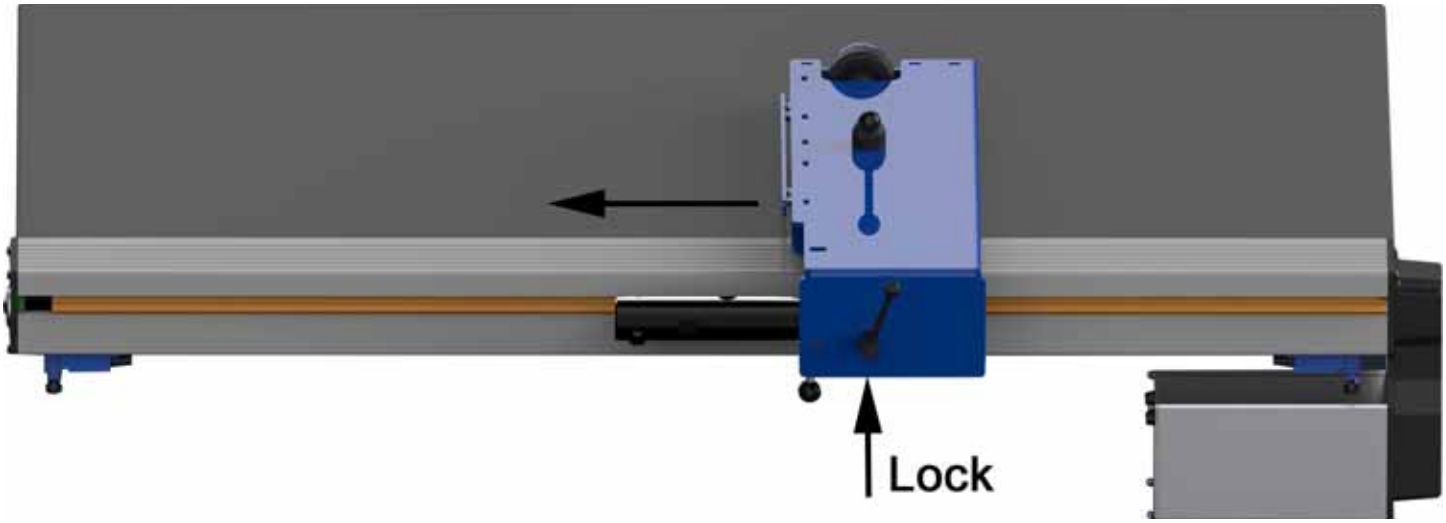

Attach Ripping Fence

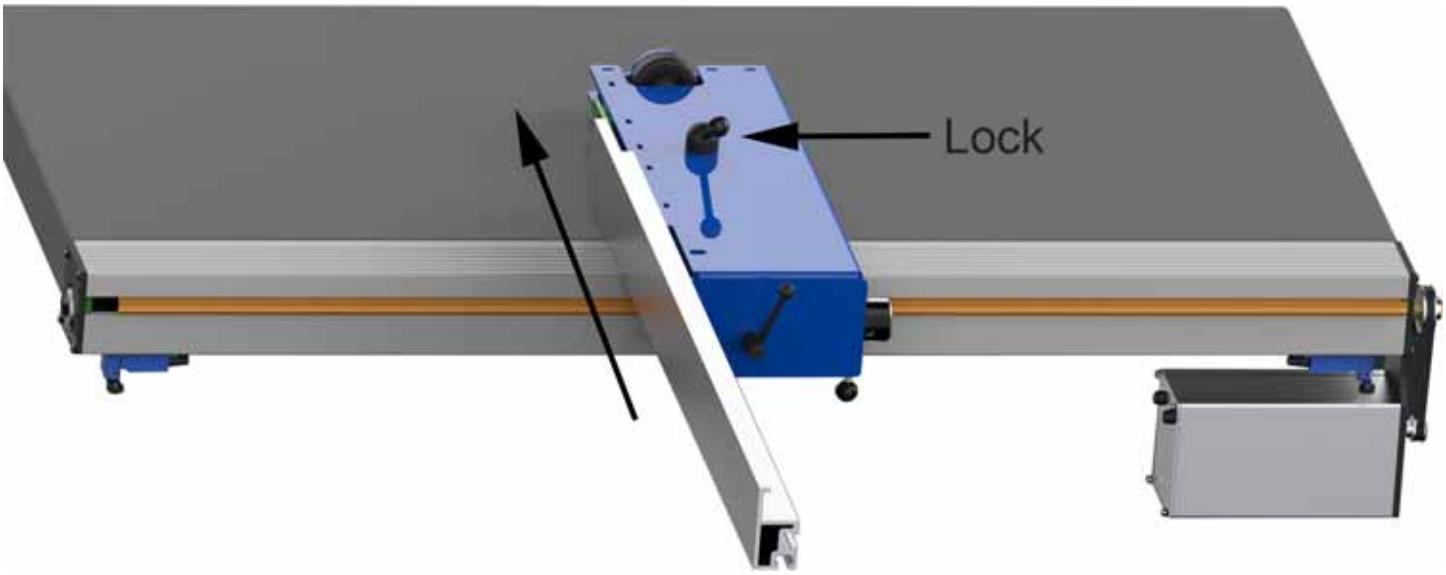

Adjusting Square

The 50mm pivot bar has 6 adjustment set screws as shown below. Adjust each one as necessary to square the fence. Once adjusted, reinstall the fence body and check for square.

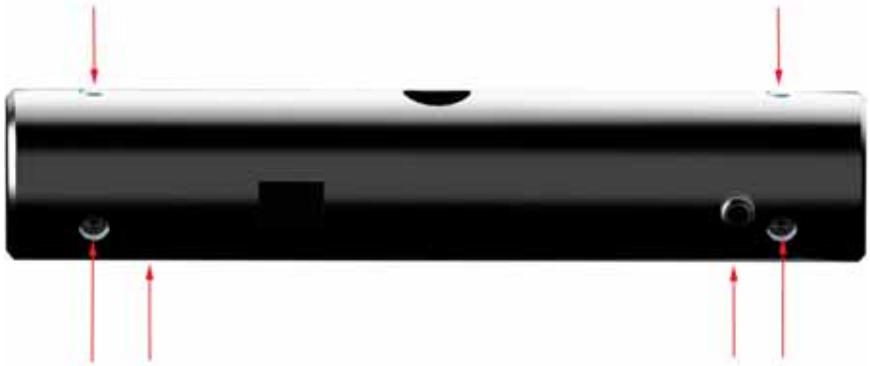

Note: Adjust the set screws using a 5mm hex wrench.

Check Pulleys

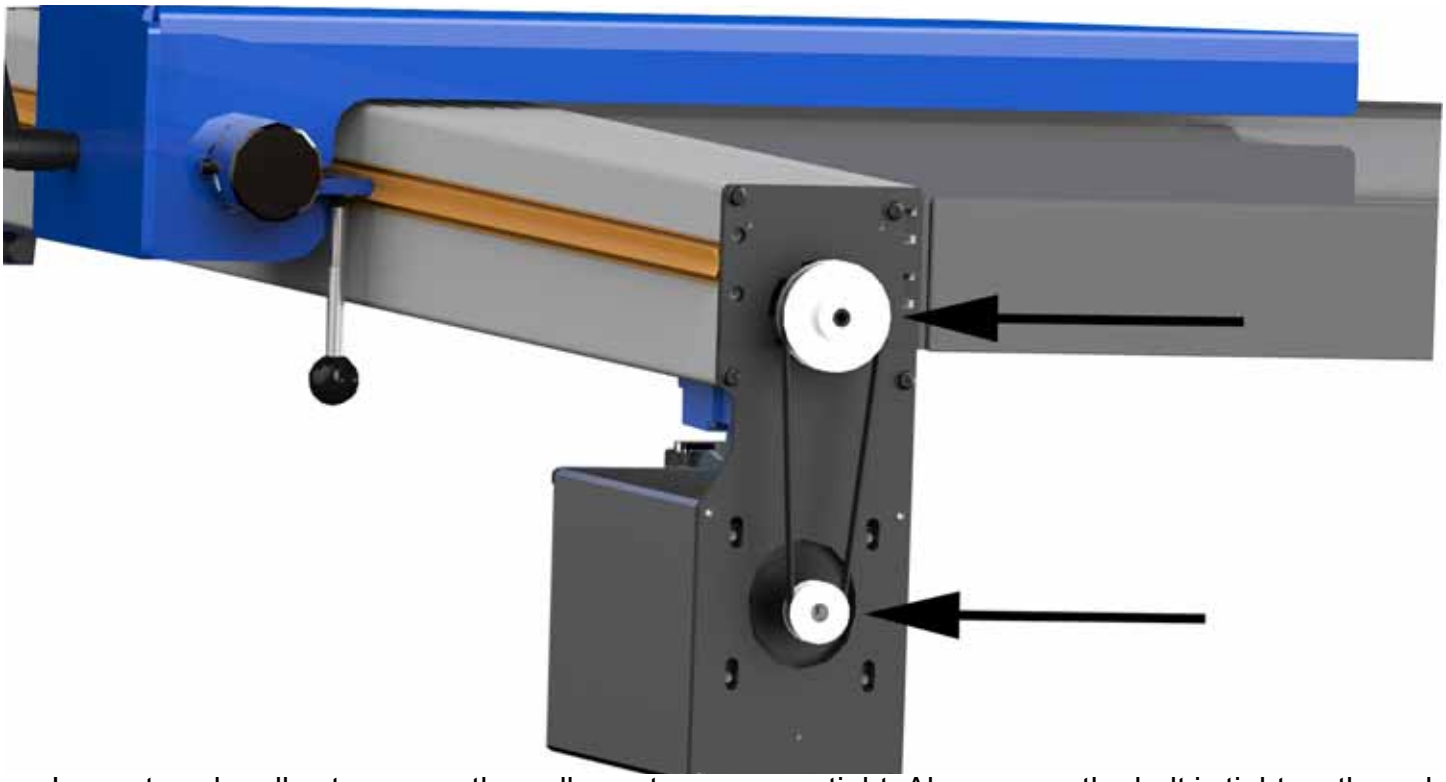

Inspect each pulley to ensure the pulley set screws are tight. Also ensure the belt is tight on the pulleys. See “Maintenance Schedule” on page 20 for belt tension instructions.

Attach Cover

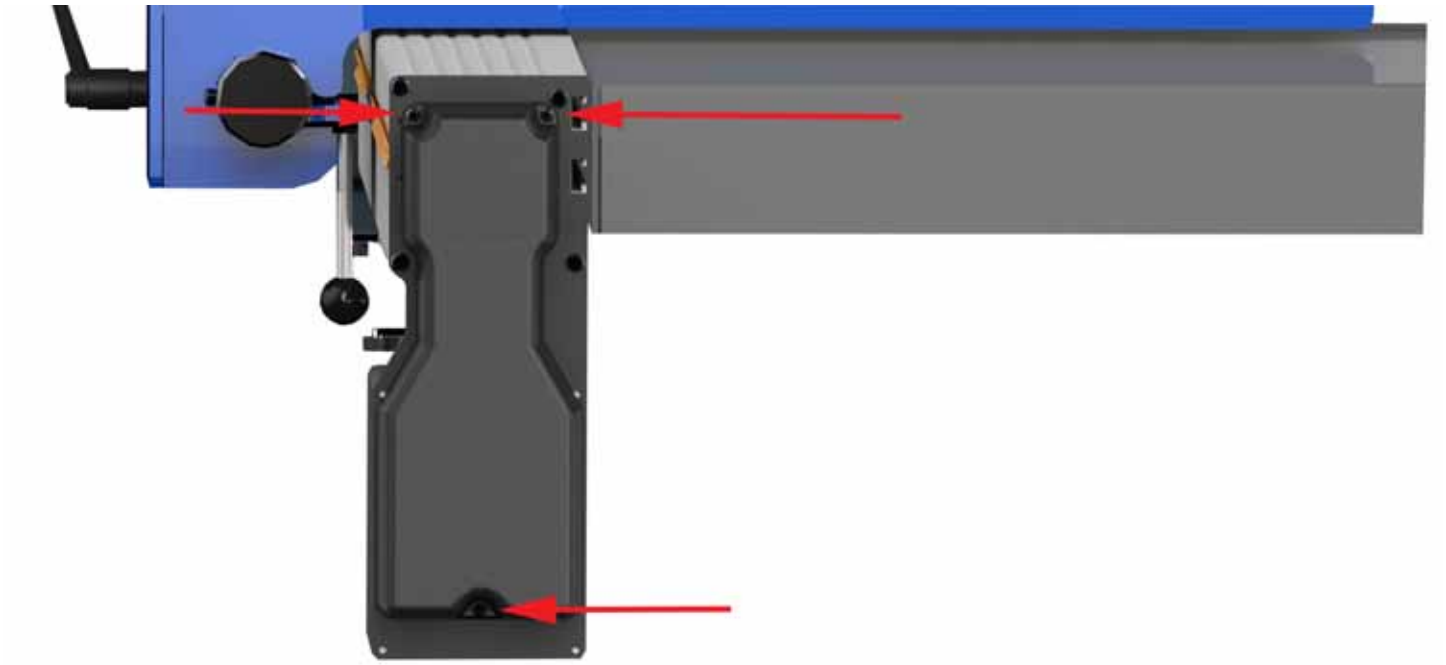

Controller Stand

Description and Use

The TigerStop control stand is the bracket used for mounting the controller to any support structure.

The control stand can be configured for a straight base or a 90° base by adjusting the base hardware. Mount the controller stand anywhere that is convenient for the operator.

Installation

Parts List

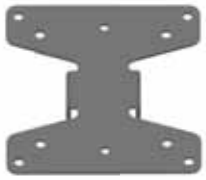

Control Stand Top
x1

Top Mount
x1

Bottom Mount
x1

Control Stand Bottom
x1

Socket Head Cap Screw x2

Spacer x1

Through Bolt x3

Flange Nut x3

Tools Required

13mm Wrench

5mm Hex Wrench

1.

2.

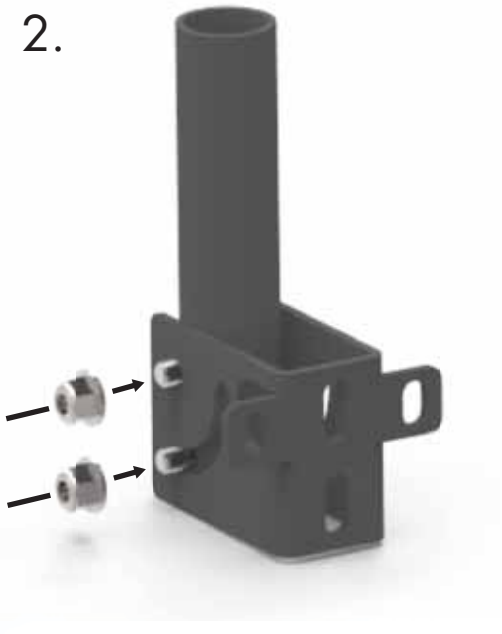

3.

4.

5.

6.

7.

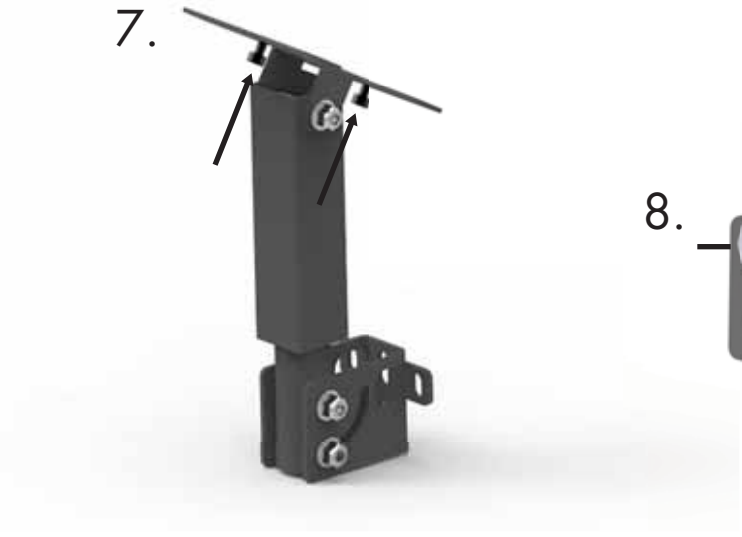

8.

9.

Final Connections

A Note on Cable Routing

When routing cables, you will want to adhere to a few guidelines;

- •Keep data cables and power cables separate.
- •Keep cables away from dust collection systems.
- •Keep cables away from florescent lighting.
- •Keep data cables away from any electrical noise generating devices.
- •Do not overtighten any zip ties or other cable management restraints.
- •Ensure all cables are routed so that they will not become crushed or pinched.

TigerFence Amp and Controller Connections

1. Ensure TigerFence is powered off.
2. Locate the controller cable.

Note: The controller cable is a proprietary cable. Do NOT use an "off the shelf" cable.

3. Plug the black end into the TigerFence controller.
4. Plug the silver end into the TigerFence motor box.

TigerFence motor box

TigerFence controller

Setup

Power Up

1. Power up TigerFence by toggling the red switch on the amplifier box.
2. Follow the instructions on screen to run the Home Routine.

When the Home Routine is finished, TigerFence will be as far from the tool as possible.

Run Drive Test

The drive test measures how hard the TigerFence has to work to get through its travel. This test will show if the installation has been performed properly.

```
XH                Ready
Position =  Current
Next     =
          Calib Show
```

1.Press the [Show] soft key to show the menu options.

```
XH                Ready
Position =  Current
Next     =
Menu Incr PrSet List
```

2.Press the [Menu] soft key to display the menu select screen.

```
XH                Menu
Password =
```

3.Enter the password and press [=]

Note: The password is set to the TigerFence serial number by default.

```
XH  < Select >  Menu
A-Setup   C-Options
B-Offset  D-PartList
  A    B    C    D
```

4.At the Menu Select screen, press the button.

```
XH   Select      Menu
A-Debug

< A                 >
```

5.Press the [Debug] soft key to access the debug menu.

```
XH  <IO Test > Debug
Run the IO test?

Press OK to begin.
```

6.Press the button.

```
XH  <Drv Test> Debug
Run the Drive test?

Press START to run
```

7.Follow the prompts on screen to run the drive test.

Drive Test Results

If the Drv, MxP or MxN are higher than 15,000, then the TigerFence has not been properly installed. Do NOT put TigerFence into service. Remove TigerFence from the table and ensure the mounting surface is flat. Then remount TigerFence and ensure that the mounting hardware is not over-tightened. Run the drive test again to ensure that drive is below 15,000. Press [Stop] when finished.

Find the End Limits

```
XH                Ready
Position =  Current
Next     =
          Calib Show
```

1.Press the [Show] soft key to show the menu options.

```
XH                Ready
Position =  Current
Next     =
Menu Incr PrSet List
```

2.Press the [Menu] soft key to display the menu select screen.

```
XH                Menu
Password =
```

3.Enter the password and press [=]

Note: The password is set to the TigerFence serial number by default.

```
XH  < Select >  Menu
A-Setup    C-Options
B-Offset   D-PartList
  A    B    C    D
```

4.Press the [Setup] soft key to enter the Setup menu.

5.Press until you get to the FindLim setting.

```
XH  <FindLim > Setup
Find the end limits?

Press START to run
```

6.Follow prompts on screen to run routine.

Calibrate

After the Find end limits routine has finished...

```
XH  < Calib  > Setup
Enter distance
from zero=  ##.###in
                Done
```

1.Press until you get to the Calibrate setting.
2.Measure how far TigerFence is from the saw blade.
3.Enter the measurement and press the [=] button.

Safe Zone

Safe Zone sets the minimum distance from the blade which is considered safe. TigerFence will warn the user before traveling into the safe zone.

```
XH                Ready
Position =  Current
Next     =
          Calib Show
```

1.Start at the Ready Screen.

2.Press the [Show] soft key to show the menu options.

```
XH                Ready
Position =  Current
Next      =
Menu Incr PrSet List
```

3.Press the [Menu] soft key to display the menu select screen.

```
XH                Menu
Password =
```

4.Enter the password and press [=]

Note: The password is set to the TigerFence serial number by default.

```
XH  < Select >  Menu
A-Setup   C-Options
B-Offset  D-PartList
  A    B    C    D
```

5.Press the [Options] soft key to enter the Options menu.

```
XH  <SafeZone> Optns
SafeZone =   3.000in
Password =
                Done
```

6.Press the button until you get to Safe Zone.

To set Safe Zone...

1. Enter the password and press [=].
2. Enter the new safe zone value.
3. Press [=] to save the value.

Note: The password is set to the TigerFence serial number by default.

Inches or Metric?

TigerFence can display its position in inches or in metric. To switch between inches and metric...

```
XH  < Units  > Optns
Current units of
measure:    INCHES
        ↑     ↓   Done
```

1.From Safe Zone setting, press until you get to the Units setting.
2.Press [B] to toggle between Inches and Metric.
3.Press the [Done] soft key when finished.

TigerFence Basic Functions

Manual Movement

To manually move TigerFence to a stop position, you must enter the length you want TigerFence to go to. This length can be entered as a decimal or a fractional value.

Entering Decimals

```
XH                Ready
Position =  Current
Next      =
           Calib Show
```

1.Start at the Ready Screen.

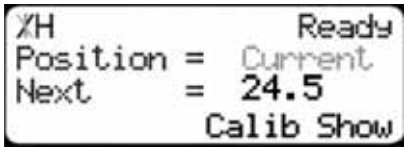

2.Enter a length at the keypad.
Example: To enter 24 1/2 as a decimal, enter [2] [4] [.] [5].
Then press [Start] to move TigerFence.

Entering Fractions

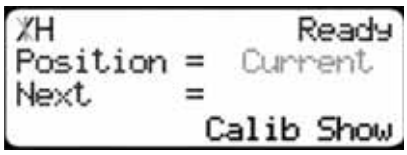

1.Start at the Ready Screen.

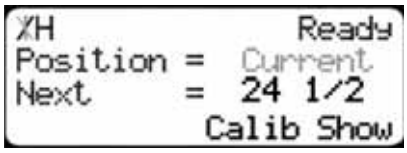

2.Enter a length at the keypad. Use the to put a space between the whole numbers and the fractional numbers. Example: To enter 24 1/2 as a fraction, enter [2] [4] [1] [/] [2]. Then press [Start] to move.

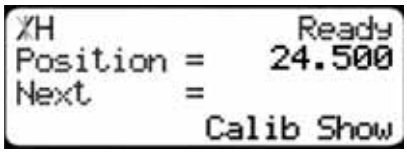

3.Notice that even though you entered a fraction, TigerFence will display the position as a decimal once it has moved. TigerFence cannot display fractions in the ‘Position’ field.

Calculator

TigerFence has a calculator function that can be used to do simple math problems.

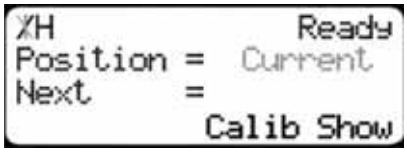

1.Start at the Ready Screen.

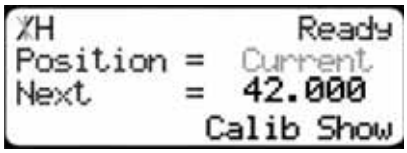

2.Just like a normal calculator, you can use the math function keys to enter math problems.
Example: I want to add 12 inches to 30 inches.
Press [1] [2] [+] [3] [0] [=].
The answer will appear in the ‘Next’ field.
Press [Start] and TigerFence will move.

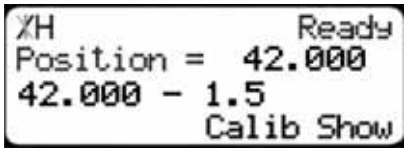

3.You can also do math functions on the current position.
Example: I want to subtract 1.5 inches from my current position of 42 inches. Press [-] [1] [.] [5]. You can see that TigerFence is doing the math function on your current position. Now press [=].

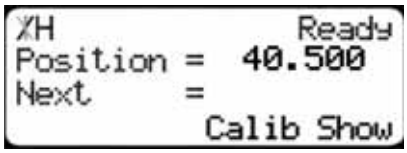

4.Press [Start] and TigerFence will move.

Jog

TigerFence can be manually jogged in or out. When activated, TigerFence will move until you let go of the jog button. It will then glide to a gentle stop.

```
XH                Ready
Position =  Current
Next     =
          Calib Show
```

1.Start at the Ready Screen.

2. At the top of the TigerFence keypad you have a  and a  button.
3. To jog, press and hold one of these buttons.

Note: If the jog buttons move TigerFence in the wrong direction, you can use the 'Jog Reverse' setting in the 'Setup' menu to reverse the movement.

Increment

The increment function is a push feed mode used to step TigerFence through a series of movements. Increment...

- •Can be a positive value that will move TigerFence towards the tool.
- •Can be a negative value that will move TigerFence away from the tool.
- •Will compensate for kerf automatically using the 'Kerf' setting in the 'Setup' menu.
- •Can only store one increment value at a time.

```
XH                Ready
Position =  Current
Next     =
          Calib Show
```

1.Start at the Ready Screen. Press the [Show] soft key to display more options.

```
XH                Ready
Position =  Current
Next     =
Menu Incr PrSet List
```

2.A new set of soft key options have appeared. Press the [Incr] soft key to access the increment feature.

```
TH     Enter    Incr
Position =   42.000
Incr Size=
```

3.Enter the size you want to increment and press [=].

For this example, I am going to use an increment size of 2 in.

```
\H   Incr Move  Incr
Position = 42.000in
Next     = 38.875in
Incr Size=  2.000in
```

4.The current position is 42. If that is where you want to start, press [Start] to begin incrementing. If you need to move TigerFence, enter the position and press [Start]. TigerFence will move to position. Then press [Start] to begin incrementing.

```
XH                Ready
Position =  Current
Next     =
Menu Incr PrSet List
```

5.When you are finished, press [Stop] to return to the Ready Screen.

Preset

The Preset function is a set of 100 programmable hot keys used to quickly access common lengths. Presets...

- •Can be used in Set point, Pusher or Increment mode.
- •Can be programed in Preset slots number 1 - 100.

Note: Preset functionality can be changed using the 'Preset' setting in the part list menu.

Preset Programing

```
XH                Ready
Position =  Current
Next     =
           Calib Show
```

1.Start at the Ready Screen. Press the [Show] soft key to display more options.

```
XH                Ready
Position =  Current
Next     =
Menu Incr PrSet List
```

2.A new set of soft key options have appeared. Press the [PrSet] soft key to access the preset feature.

```
TH   Enter      PrSet
Pre-Set#
Press START to move.
View Edit Clear
```

3.Enter the number of the preset you want to program and then press the [Edit] soft key.

For this example, I am going to program preset number 1.

```
TH  <Edit  1 > PrSet
Pre-Set  = Empty
New Value=15 15/16
     View Clear
```

4.Enter the length you want the preset to be and press [=].

For this example I am using a length of 15 15/16 inches.

```
XH  <Edit  1 > PrSet
Pre-Set  =  15.937in
New Value=
     View Clear
```

5.The preset value is now set.

Preset Use

```
XH                Ready
Position =  Current
Next     =
           Calib Show
```

1.Start at the Ready Screen. Press the [Show] soft key to display more options.

```
XH                Ready
Position =  Current
Next     =
Menu Incr PrSet List
```

2.A new set of soft key options have appeared. Press the [PrSet] soft key to access the preset feature.

```
TH   Enter      PrSet
Pre-Set#
Press START to move.
View Edit Clear
```

3.Enter the preset number you wish to use. Then press [Start].

For this example I will use preset 1.

```
XH                Ready
Position =    15.937
Next     =
Menu Incr PrSet List
```

4.TigerFence will move to the preset position.

Delete Preset

```
XH                Ready
Position =  Current
Next     =
          Calib Show
```

1.Start at the Ready Screen. Press the [Show] soft key to display more options.

```
XH                Ready
Position =  Current
Next     =
Menu Incr PrSet List
```

2.A new set of soft key options have appeared. Press the [PrSet] soft key to access the preset feature.

```
TH   Enter      PrSet
Pre-Set#
Press START to move.
View Edit Clear
```

3.Enter the preset number you want to delete. Then press the [Clear] soft key.

```
XH  <Clear 1 > PrSet
Pre-Set  =  15.937in
Press OK to clear.
     View Edit
```

4.Press [OK] to clear the preset.

5.TigerFence has now cleared the preset.

Quick Calibration

The quick calibration is a short cut to the calibration setting.

```
XH                Ready
Position =  Current
Next     =
          Calib Show
```

1.Start at the ready screen. Press the [Calib] soft key.

Note: If you are viewing the expanded options, press [Cancel] to go back.

```
XH    Calib     Ready
Enter distance
from zero=
                Done
```

2.Cut a sample piece and measure its length.

```
XH    Calib     Ready
Enter distance
from zero=33.935
                Done
```

3.Enter the length of the sample piece. Press the [Done] soft key.

For this example I have measured 33.935 as my cut length.

```
XH                Ready
Position =  33.935in
Next     =
          Calib Show
```

4.TigerFence is now calibrated.

Entering Part Lists

The list function is TigerStop's versatile part list handler, letting the user run, view, edit and clear parts lists data.

```
XH                Ready
Position =  Current
Next     =
          Calib Show
```

1.Start at the Ready Screen

2.Press the [Show] soft key.

```
XH                Ready
Position =  Current
Next     =
Menu Incr PrSet List
```

3.Press the [List] soft key.

```
TH   Enter       List
Partlist#=
Press START to run
View Edit Clear DnLd
```

4.You are now at the list interface.

There are 4 types of lists that you can enter.

Pusher

A pusher list will tell TigerFence to push the stock material into the tool. It will treat each length you enter as an incremental move. You can enter as many parts as you like into a pusher list and TigerFence will tell you when it needs another stock material piece. Pusher lists can be optimized if you have the TigerStop optimizing upgrade.

Set Point

A set point list will tell TigerFence to act as a stop. It will treat each length you enter as an absolute value from your zero point. Set point lists can be optimized if you have the TigerStop optimizing upgrade.

Pattern

A pattern list will tell TigerFence to process one stock lengths worth of parts in a push feed fashion. It will run the same pattern of parts on one stock over and over until its told to stop. Pattern lists cannot be optimized.

Pull

A pull list works just like a pattern except it pulls away from the zero point instead of pushing towards it. Pull lists cannot be optimized.

Programing a List

```
TH   Enter       List
Partlist#=
Press START to run
View Edit Clear DnLd
```

1.At the list interface, enter the list number you wish to program and press the [Edit] soft key.

```
XH   SelectType   #1
A-Pusher   C-Pattern
B-Setpoint D-Pull
  A    B    C    D
```

2.Select the type of list you would like to program.

```
XH   Select Opt   #1
Optimize Part List?
A-Yes      C-No
  A          C
```

3.If you have the TigerStop optimizing upgrade you will be asked to select if this is an optimized list. If you do not have the optimizing upgrade, continue to the next step.

```
XH   Select H&T   #1
Head & Tail cuts?
A-Global  C-Local
  A         C
```

4.Select if you want to use a global or a local head and tail cut.

Note: Head and tail cuts are trim cuts at the ends of your material.

Global - Uses the head and tail cut setting from the part list menu.

Local - Allows you to set a custom head and tail cut that is used for this list only.

```
XH    Line 1→     #1
Length  =    0.000in
Quantity=    0
                Done
```

5.You will now be taken to the programing screen for line 1. Enter the length of the part you wish to process and press OK.

In this example I will tell TigerFence to cut a 24 inch part.

```
XH    Line 1→     #1
Length  =   24.000in
Quantity=5
                Done
```

6.The cursor will now drop to the quantity. Enter how many parts you want followed by OK.

In this example I will tell TigerFence that I want 5 parts.

```
XH   ←Line 2→     #1
Length  =    0.000in
Quantity=    0
                Done
```

7.You be taken to line 2. Repeat steps 5 and 6 until you have entered all the parts you want to process. Press the [Done] soft key to exit.

```
XH   Complete     #1
Part List saved!
Press START to run
Press CANCEL to exit
```

8.The list has now been saved. You can press Start to run it or cancel to exit and return to the ready screen.

To download the complete TigerStop users guide, visit www.tigertamer.com.

TigerFence Maintenance Schedule

Record Important Settings

Setting	Value	Setting	Value
Serial Number		Scale	
Min Limit		Kerf	
Max Limit		Lash	

Daily

1. Clean all dust and debris from drive areas.
2. Check all exposed cabling for damage.
3. Check calibration and calibrate if necessary.

Quarterly

1. Run the drive test. Ensure the Drv, MxP and MxN are all below 15,000.

Yearly

1. Inspect the condition of the drive belt and replace if necessary.
2. Ensure belt is tight.

To Tighten Belt...

1. Remove belt cover.
2. Loosen the 4 motor mount bolts.
3. Pull down on the motor assembly until belt is tight.
4. Tighten the motor mount bolts.

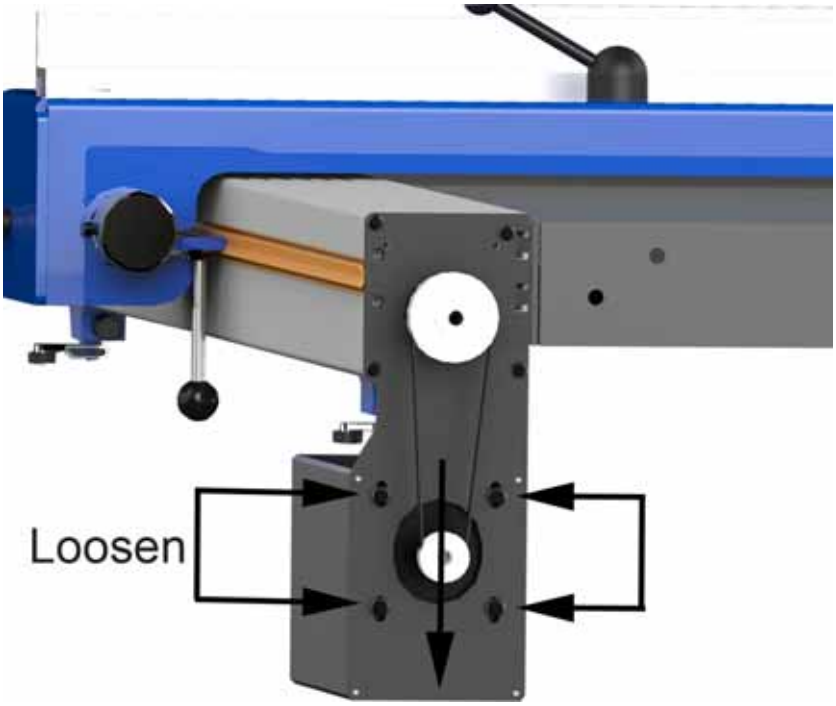

Maintenance Log

Date	Maintenance Performed	Drive Test Results
		MxP= P= MxN= P=
		MxP= P= MxN= P=
		MxP= P= MxN= P=
		MxP= P= MxN= P=
		MxP= P= MxN= P=
		MxP= P= MxN= P=
		MxP= P= MxN= P=
		MxP= P= MxN= P=
		MxP= P= MxN= P=
		MxP= P= MxN= P=
		MxP= P= MxN= P=
		MxP= P= MxN= P=
		MxP= P= MxN= P=
		MxP= P= MxN= P=
		MxP= P= MxN= P=
		MxP= P= MxN= P=
		MxP= P= MxN= P=
		MxP= P= MxN= P=
		MxP= P= MxN= P=
		MxP= P= MxN= P=
		MxP= P= MxN= P=
		MxP= P= MxN= P=
		MxP= P= MxN= P=
		MxP= P= MxN= P=
		MxP= P= MxN= P=
		MxP= P= MxN= P=
		MxP= P= MxN= P=
		MxP= P= MxN= P=
		MxP= P= MxN= P=

FIND US ONLINE AT

www.tigerstop.com

TigerStop®

fast and accurate...every time

12909 NE 95th Stree
Vancouver, WA 98682-2426
1.360.254.0661
sales@tigerstop.com

TigerStop B.V. Holland
31 546 575 171
info@tigerstop.nl